This is the optimization code tutorial as provided in this page as an open access MIT License and the results were described in these papers:

B. Noroozi and B. I. Morshed, "Design and Optimization of Printed Spiral Coils for Wireless Passive Sensors, IET Wireless Sensor Systems, Mar. 2021. (https://doi.org/10.1049/wss2.12019)

B. Noroozi and B. I. Morshed, "PSC Optimization of 13.56-MHz Resistive Wireless Analog Passive Sensors", IEEE Trans. Microwave Theory and Techniques, vol. 65, no. 9, pp. 3548-3555, Sept. 2017.

We request you to cite the above papers if you utilize this algorithm.

TUTORIAL

- This document fully describes the steps to find the optimum pair of Printed Spiral Coil (PSC) like the sample shown in Fig.1

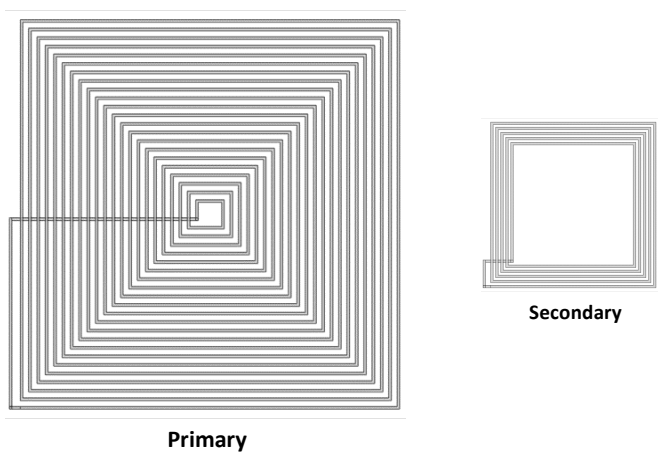

Fig. 1. A sample design of a PSC pair.

A. The very first step is defining the coil sizes (***d_{O1}*** and ***d_{O2}***) and the two resistors: the input resistor in signal generator (***R_{IN}***) and the transducer's normal resistor (***R_T***), as they are shown in Fig. 2. The Coil specifications and equivalent circuit are shown in Fig. 3. In all our designs designs they are considered as: ***R_T*** = 1 KΩ, ***R_{IN}*** = 50 Ω.

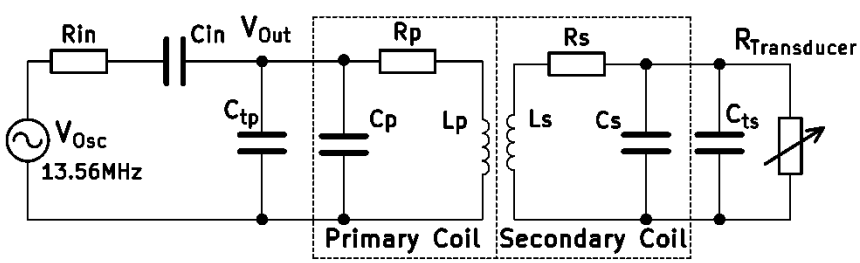

Fig. 2. Complete sensor circuit schematic: RIN represents the signal generator's output resistor, ***C_{tp}*** and ***C_{ts}*** are the primary and secondary trimmer capacitors to adjust the optimum capacitors that are found in optimization process (***C_1*** and ***C_2***).

B. After deciding, or defining on R_T, R_{IN}, d_{O1}, and d_{O2} a MATLAB code that finds the optimum primary and secondary coils must be run. This code's name is:

BestCinC1SWNC2_GA_2(Rin,RL,dO1,dO2)

R_{IN} and R_L (R_L is the same as R_T) are in ohms and d_{O1} and d_{O2} are in mm. There are some notes that should be taken into consideration on this code as follows:

i. There are some constants are defined and the user can change these constants if needed. These are the constants:

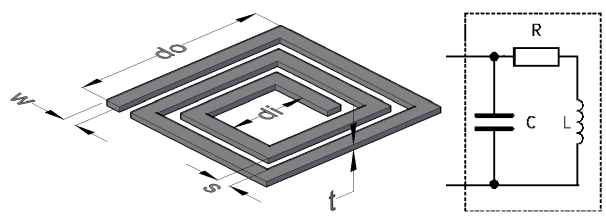

Fig. 3. (L) PSC physical characteristics, (R) the equivalent circuit

Name the code	Represents for	Given Value	Unit
f	Working frequency	13.56	MHz
mu	μ_r: the air magnetic permeability. If the coil is surrounded by something else, the value should be changed	1	-
Tc	Conductor (trace on the PCB) thickness	38.1 (1.5)	µm (mil)
row	ρ: conductor's resistivity (PCB trace). Here the conductor is copper.	1.7×10^{-8}	Ω.m

ii. There are 11 variables are subject to optimization:

X(1)=RL, X(2)=CIN, X(3)=C1, X(4)=N1, X(5)=S1, X(6)=W1, X(7)=N2, X(8)=S2, X(9)=W2, X(10)=C2, X(11)=k

X = [RL CIN C1 N1 S1 W1 N2 S2 W2 C2 k]

In the code, R_L (same as R_T) is always constant (we must define it among the variables because we get the derivative wrt this variable to find the sensitivity). Then actually there are 10 variables.

iii. Since we use Genetic Algorithm for optimization, we need to define, first the variables upper/lower bounds, and second, the constraints.

<u>Bounds:</u>

X =	**RL** (Ω)	**CIN** (pF)	**C1** (pF)	**n1**	**S1** (mil)	**w1** (mil)	**n2**	**s2** (mil)	**w2** (mil)	**C2** (pF)	**k** (1000*real k)
lb =	RL 5	5	5	6	6	3	6	6	50	60	]
ub=	RL 20	20	30	70	100	20	30	50	200	100	]

<u>Note</u>: The smaller range, the accurate results. Then we try to not choose a wide range. How we decide on the ranges?

C_{IN} and C_1: First they were taken wider i.e., 1 to 100, but when the optimum values are always less than 10, the upper range is decreased to 20 (the better value is 10, but we take 20 to give some margin). The minimum values are set at 5, because they always tend to the lower bound and since we don't like a very small capacitors (low capacitor makes the circuit very sensitive to the stray capacitors), then we increased them to 5. It is very important that 5 is still low and the current circuit with optimum values $C_1 = C_{in} = 5$ pF are very sensitive to the stray and proximity to the body. Then for future designs, they'd better to have at least 10 or even 15 as the lower bounds.

n1, n2, C2: just by several runs we came up with these values. It means that after several runs, it turned out that the numbers of rounds are in these ranges. Finally, we chose the ranges a bit wider than the results to make sure we cover all the possible results.

si and wi: the lower bounds obviously are specified by the PCB fabricator as 6 mil. The upper bounds are also chosen like n1 (and n2 and C2) by several runs and choosing the values that are bit wider than all the results.

K: We don't want a k more than 0.1, because with the size and the structure of our coils, having a k more than 0.1 for a distance more than 15 mm is almost impossible. Then the upper bound must be set on 0.1, but since the k in the equations is divided by 1000, the upper bound is set at 100. The lower bound is not critical and a number less than 80 is suffice.

iv. GA Constraints: there are two groups of constraints: the first is to make sure that internal size will not be negative. In the following equation, "*i*" is 1 (for primary) and 2 (for secondary).

$-d_i < 0$ (The constraints in GA must be in this form, means: C < 0)

$$C1[1,1] = -d_{O1} \times 10^{-3} + 2 \times (n_1 - 1) \times S_1 \times 25.4 \times 10^{-6} + 2 \times n_1 \times w_1 \times 25.4 \times 10^{-6} < 0$$

$$C1[1,2] = -d_{O2} \times 10^{-3} + 2 \times (n_2 - 1) \times S_2 \times 25.4 \times 10^{-6} + 2 \times n_2 \times w_2 \times 25.4 \times 10^{-6} < 0$$

The second constraint is set for having a primary large Fill-Factor:

$$\varphi_1 = \frac{n_1(s_1 + w_1) - s_1}{d_{O1} - n_1(s_1 + w_1) + s_1} > 0.85$$

$$==\gg \quad C1[1,3] = 0.85 - \frac{n_1(s_1 + w_1) - s_1}{d_{O1} - n_1(s_1 + w_1) + s_1} < 0$$

This constraint guarantees the small hollow in the primary coil (it makes k smooth when we are moving towards the sides)

$$Constraint: C1(X)$$

v. The equations that are used in this code for ***R*** and ***L*** and other parameters are as follows:

Coil equivalent self-inductance: $L = \frac{1.27\mu_0(d_O + d_i)n^2}{4}\left[ln\left(\frac{2.07}{\varphi}\right) + 0.18\varphi + 0.13\varphi^2\right]$ (1) (Current Sheet)

Coil equivalent resistor: $R \approx R_{DC}[1 + \frac{d^2 . f \pi \mu_0 \sigma}{4.48}]$ (3)

Where: $R_{DC} = \frac{L_C}{t.W.\sigma}$ (4), $d = \sqrt{\frac{tw}{\pi}}$ (5)

(t is the conductor thickness and is the same as TC in the MATLAB code)

(σ is the inverse of ρ that is named "row" in the MATLAB code)

Conductor length (length of trace in the coil):

$$L_C = 4nd_O - 3nw - (2n-1)^2(s+w) \quad (6)$$

Fill-Factor: $\varphi = \frac{d_O - d_i}{d_O + d_i} = \frac{d_O - [d_O - 2nw - 2(n-1)s]}{d_O + [d_O - 2nw - 2(n-1)s]} = \frac{n(s+w) - s}{d_O - n(s+w) + s}$ (2)

Coil inner size: $d_i = d_O - 2nw - 2(n-1)s$

$Z_2(R_T) = R_S + j\omega L_S + \frac{1}{1/R_T + j\omega C_2}$ $(C2 = Cts + CS)$

Reflected Impedance (Fig. 4): $Z_R(R_T) = \frac{[M \times \omega]^2}{Z_2(R_T)} = \frac{[k \times \omega]^2 L_P L_S}{Z_2(R_T)}$ (9)

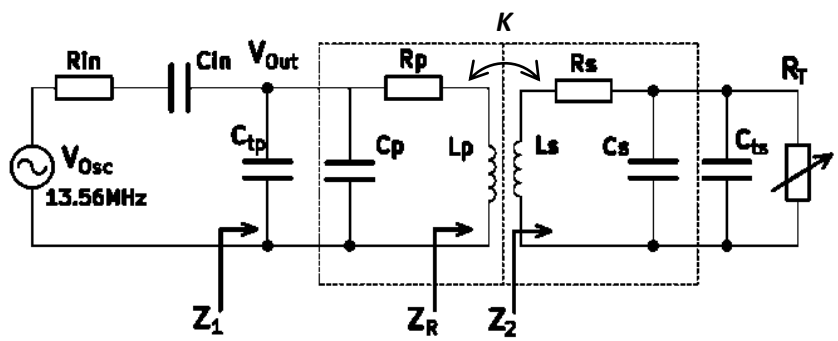

Fig. 4. Circuit schematic of WRAP system.

Mutual Inductance/Coupling factor $M = k\sqrt{L_P L_S}/1000$ (10)
(divided by 1000 because k has increased by a factor of 1000 in the MATLAB code for better resolution)

$$Z_1(R_T) = 1/\left(j\omega C_1 + \frac{1}{R_P + j\omega L_P + Z_R(R_T)}\right) \quad (C1 = Ctp + CP) \quad (11)$$

$$Z_{in} = R_{in} + \frac{1}{j\omega C_{in}} \quad (12)$$

$$\frac{V_{OUT}(R_T)}{V_{in}} = \frac{Z_1(R_T)}{Z_1(R_T) + Z_{in}} \quad (13)$$

$$Sensitivity\ (R_T) = \frac{d(V_{OUT}/V_{OSC})}{dR_T} = \frac{d}{dR_T}\left(\frac{Z_1(R_T)}{Z_1(R_T) + Z_{in}}\right) \quad (14)$$

vi. How this MATLAB code works and what is its output?

This code generates 100 optimum coil pairs. Why 100? Since Genetic Algorithm is a stochastic method, not all the optimization results are the same. Since the sensitivity is a ever increasing function with k, most of the optimum k's are the upper bound, that is 0.1. however, few of k's out of 100 has k a bit smaller than 0.1, like, 0.09 and 0.095. We are looking for the k's smaller than 0.1, why?

Because the smaller k, means the larger distance between the coils. For example, if k_{OPT}=0.09 then the optimum distance between the coils is larger than when k_{OPT}=0.1. It is obvious that the maximum sensitivity resulted for k_{OPT}=0.1 is larger than the resulted sensitivity for k_{OPT}=0.09, simply because it shows lower distance of the coils. The output file that have 100 coil profiles is named *Sensitivity.xls*. The outputs are sorted ascendingly for K_{OPT} so that the smallest K_{OPT} is placed on the top row. One sample of this output file is shown in Table 1. We usually choose the smallest K_{OPT} or the first row. We should also take it into consideration that while the first row reflects the minimum K_{OPT} or the maximum possible coil distance:

1- We should verify the distance between the coils that makes that k_{OPT}.
2- If that K_{OPT} is too small and reflects the far distance between the coils that is not necessary we can increase it, because smaller K_{OPT} means the smaller sensitivity.

Table 1. The output XLS file (Sensitivity.xls) from BestCinC1SWNC2_GA_2.m Matlab code. Here the table is sorted for Kmax ascending.

RL	Cin	C1	n1	s1	w1	n2	s2	w2	C2	k	Rp	Lp	Rin	Rs	Ls	PHI1	PHI2	Kmax	Sen_Kmax	Sensitivity
1000	5	5	22	36	16	5	12	12	150	100	45.8539	13.68118	50	5.77149	0.894564	0.883428	0.158963	90	1.290385	1.278775
1000	5	5	23	25	26	6	24	6	140	100	45.30611	13.93008	50	6.98569	1.003441	0.945475	0.247069	90	1.267236	1.198723
1000	5	5	22	11	40	4	6	6	150	100	44.1075	13.60862	50	5.501328	0.873693	0.887944	0.056345	90	1.361021	1.361021
1000	5	5	22	35	17	6	6	23	140	100	45.64512	13.65695	50	6.077346	0.944906	0.884931	0.27123	92	1.348589	1.241537
1000	5	5	22	6	44	7	30	6	143	100	44.62359	14.02492	50	7.297937	0.984426	0.862637	0.392641	92	1.217061	1.188792
1000	5	5	22	31	20	5	13	6	139	100	45.88452	14.09968	50	6.50617	1.037368	0.858241	0.116246	94	1.304382	1.302175
1000	5	5	22	29	23	4	6	6	150	100	44.7271	13.51246	50	5.501328	0.873693	0.893999	0.056345	94	1.343051	1.343211
1000	5	5	23	34	17	5	16	6	150	100	46.58226	14.15382	50	6.394194	0.96715	0.931161	0.135564	94	1.203571	1.186289
1000	5	5	22	17	34	6	13	6	100	100	44.48411	13.75414	50	7.599027	1.338838	0.878934	0.147144	96	1.650503	1.608037
1000	7	5	20	6	49	5	14	8	145	100	40.49683	11.59085	50	6.122952	0.956221	0.862637	0.138848	96	1.276589	1.276504
1000	5	5	22	6	44	6	8	6	92	100	44.62359	14.02492	50	7.877816	1.549333	0.862637	0.106831	98	1.717999	1.681575
1000	5	5	23	39	13	5	6	6	104	100	46.75791	13.71007	50	6.767449	1.245007	0.960003	0.07363	98	1.597343	1.596811
1000	20	5	14	67	17	6	6	6	82	100	29.02589	5.530501	50	7.989331	1.651058	0.884931	0.091489	100	0.8886355	0.8886355
1000	5	5	22	6	45	6	6	6	74	100	43.83921	13.48853	50	7.989331	1.651058	0.895519	0.091489	100	1.913805	1.913805
1000	5	5	22	42	10	9	9	6	50	100	47.87637	13.82747	50	10.99003	2.632778	0.874461	0.190505	100	1.939454	1.939454
1000	5	5	22	13	38	9	6	9	50	100	44.22519	13.65695	50	10.36352	2.591837	0.884931	0.195929	100	2.084356	2.084356
1000	6	5	21	40	15	5	21	6	150	100	43.71034	12.31197	50	6.207566	0.865973	0.893999	0.16929	100	1.229449	1.229449
1000	5	5	23	6	44	8	10	6	64	100	44.82856	14.02906	50	9.885656	2.169968	0.939087	0.176277	100	1.929173	1.35673
1000	20	5	14	59	24	8	10	8	68	100	28.66365	5.589638	50	9.266593	1.995428	0.87595	0.205081	100	0.8981094	0.8981094
1000	5	5	22	34	18	7	6	6	62	100	45.4567	13.63276	50	9.166977	2.08306	0.886437	0.109952	100	1.968877	1.968877
1000	5	5	23	6	45	5	6	6	102	100	43.97311	13.46999	50	6.767449	1.245007	0.976402	0.07363	100	1.705821	1.705821
1000	5	5	22	12	39	6	6	6	76	100	44.1655	13.63276	50	7.989331	1.651058	0.886437	0.091489	100	1.910688	1.910688
1000	5	5	22	31	21	6	6	10	91	100	44.98454	13.56045	50	7.23393	1.425074	0.890967	0.129051	100	1.765872	1.765872
1000	5	5	22	26	26	6	30	6	145	100	44.4005	13.44079	50	6.651143	0.864107	0.898566	0.309278	100	1.270369	1.270369
1000	20	5	14	6	74	8	6	15	79	100	27.80882	5.481697	50	8.370333	1.730966	0.892482	0.259034	100	0.9060143	0.9060143
1000	5	5	22	6	44	9	6	9	55	100	44.62359	14.02492	50	10.36352	2.591837	0.862637	0.195929	100	2.03352	2.03352
1000	5	5	22	11	40	6	6	6	76	100	44.1075	13.60862	50	7.989331	1.651058	0.887944	0.091489	100	1.913977	1.913977
1000	14	18	13	44	50	16	17	8	65	100	24.56597	4.220588	50	11.49088	2.243097	0.99476	0.947078	100	0.6641153	0.6641153
1000	8	5	19	25	34	6	6	6	81	100	38.68542	10.42373	50	7.989331	1.651058	0.865579	0.091489	100	1.676027	1.461198
1000	5	5	22	40	12	7	6	9	74	100	46.9945	13.77854	50	8.42532	1.842785	0.877441	0.143811	100	1.831963	1.509958
1000	17	5	15	33	44	7	15	8	95	100	29.7419	6.204155	50	7.956478	1.436643	0.904689	0.227627	100	0.9826459	0.9366663
1000	5	5	22	30	22	6	13	7	97	100	44.85113	13.53644	50	7.36126	1.295229	0.892482	0.15726	100	1.686407	1.686407
1000	5	5	22	6	45	7	30	6	123	100	43.83921	13.48853	50	7.297937	0.984426	0.895519	0.392641	100	1.405027	1.405027
1000	6	5	21	6	47	6	6	6	81	100	42.11622	12.48782	50	7.989331	1.651058	0.881928	0.091489	100	1.835603	1.371991
1000	5	5	22	6	44	14	6	15	50	100	44.62359	14.02492	50	11.71801	2.827154	0.862637	0.57669	100	2.028571	1.914743
1000	5	5	23	40	12	7	6	8	68	100	47.10499	13.73433	50	8.62909	1.917439	0.958378	0.132298	100	1.881833	1.881833
1000	5	5	22	43	10	5	6	6	99	100	47.07933	13.32219	50	6.767449	1.245007	0.906226	0.07363	100	1.594962	1.594962
1000	5	5	23	38	14	7	19	6	96	100	46.45661	13.68586	50	8.15458	1.365795	0.961631	0.247069	100	1.600903	1.600903
1000	5	5	23	28	24	6	16	8	110	100	44.70235	13.44623	50	7.008981	1.157951	0.978057	0.194115	100	1.571877	1.544345
													0							
													0							

For example, for Table 1, if K_{OPT}=0.09 is equal to 30 mm between two coils (the distance and its associated k is investigated by COMSOL simulation) and we want to set the distance for 20 mm, we can choose larger values for K_{OPT}.

C. After picking the best coil profile from the sorted *Sensitivity.xls*, the maximum sensitivity, Kmax and K_{OPT}, must be the same with MATLAB code *Sensitivity_vs_k_V21_1.m* with the following format:

```
Sensitivity_vs_k_V21_1( C1,Rp,Lp,Cin,Rin,C2,Rs,Ls,rL )
```

The output of this file is a figure like Fig. 5. This is just for verification of maximum sensitivity and the coupling factor associated with that.

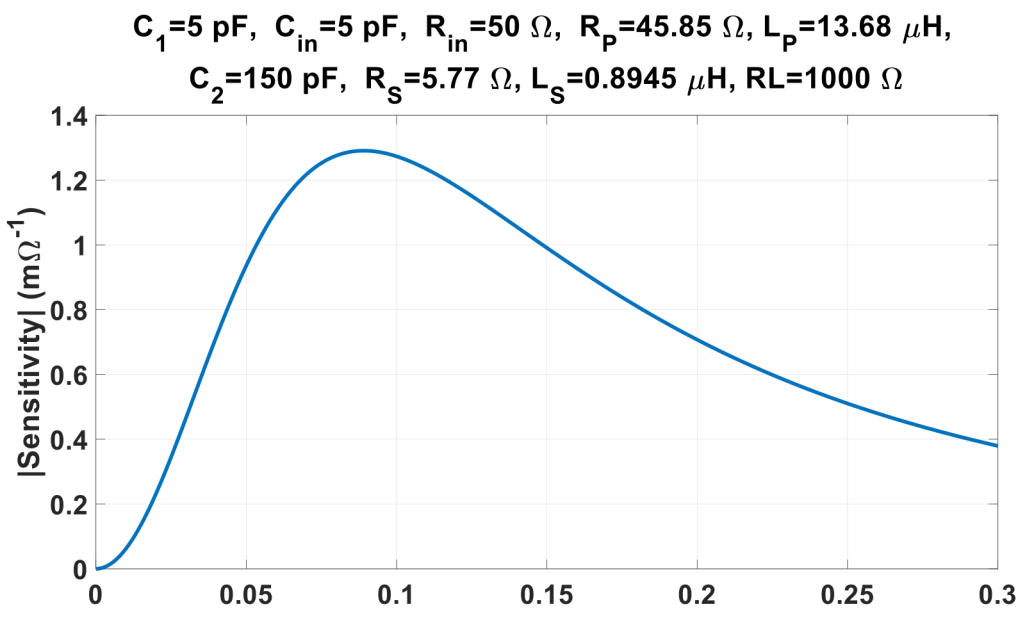

Fig. 5. The output figure of running the MATLAB code: Sensitivity_vs_k_V21_1(C1,Rp,Lp,Cin,Rin,C2,Rs,Ls,rL). Here we just want to check and make sure if the K_{OPT}=Kmax.

D. COMSOL simulation:

The next step is making sure that, in real coils (simulation is very consistent with real) the K_{OPT} is within our scope of working, or in other words, the distance between the coils that make the K_{OPT} is rational.

There are two forms of simulation in COMSOL:

1- Simulation to find the self-inductance
2- Simulation to find the coupling factor between two coils

1- Simulation to find the self-inductance

The file ***Coil_Spec.mph*** finds the self-inductance of a PSC. It has the following steps:

a) **Parameters:** In parameters section, the different parameters must be defined. Fig. 6 shows an screen shot of a sample parameters setting.
b) **Geometry:** The coil is defined in Geometry\Work Plane 1 (*wp 1*)\ Plane Geometry by a Ploygon. The corners coordinates are defined based on Fig. 7. Some coil's coordinates are saved as text documents and no need to be defined again (they must be loaded by clicking on the open file under the polygon definition table).
The boundary condition is defined as a sphere as 3 times as the external size of PSC (or much more as 200 mm radius, as it is in the current version). A sample final output of Geometry is shown in Fig. 8.
c) **Materials:** Consists of two materials: Air and Copper. All the different parts that make coil is from Copper except the isolator between the input and output port of the coil, as shown in Fig. 9.

d) Physics: Magnetic Fields (*mf*) is the physics and the input and output ports have to be specified as Fig. 10 is shown.

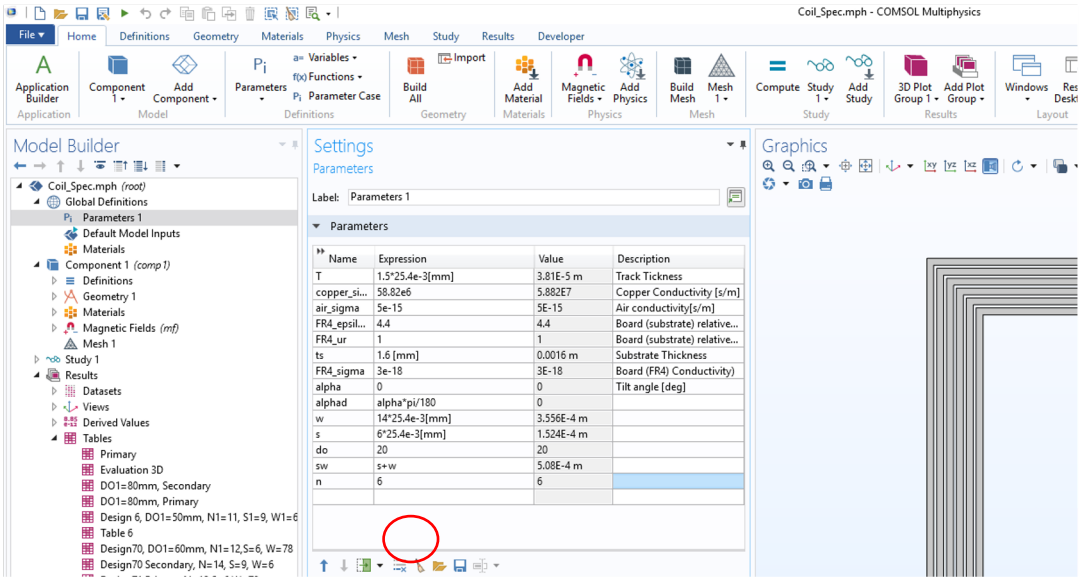

Fig. 6. The parameters setting tab in Coil_Spec.mph program.

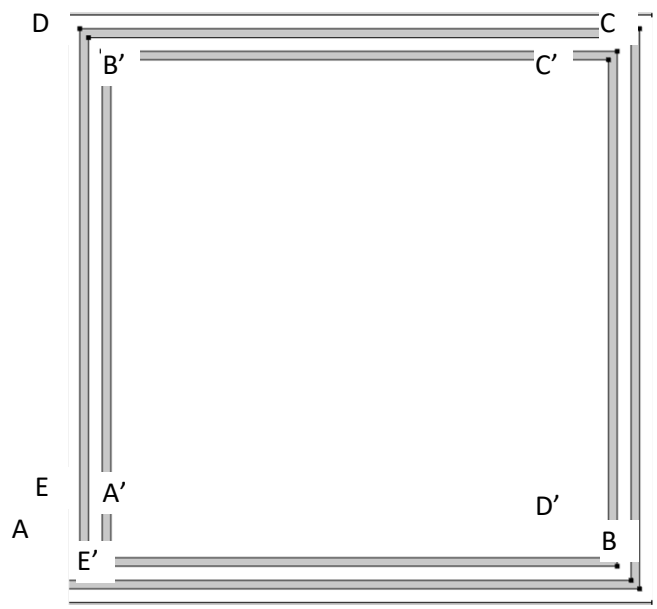

		X	Y
round n Going forward	A	$(n-2).sw$	$(n-1).sw$
	B	$D_O-(n-1).sw$	$(n-1).sw$
	C	$D_O-(n-1).sw$	$D_O-(n-1).sw$
	D	$(n-1).sw$	$D_O-(n-1).sw$
	$E\ (A\ for\ next\ turn)$	$(n-1).sw$	$n.sw$
round n Going backward	A'	$(n-1).sw+w$	$n.sw$
	B'	$(n-1)sw+w$	$D_O-(n-1)sw-w$
	C'	$D_O-(n-1)sw-w$	$D_O-(n-1)sw-w$
	D'	$D_O-(n-1)sw-w$	$(n-1)sw+w$
	E'	$(n-2)sw$	$(n-1)sw+w$

Fig. 7. The **Polygon** coordinates for COMSOL geometry modeling.

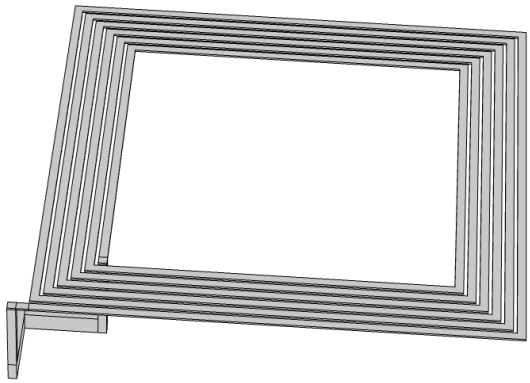

Fig. 8. A typical output from Geometry in COMSOL file Coil_Spec.mph

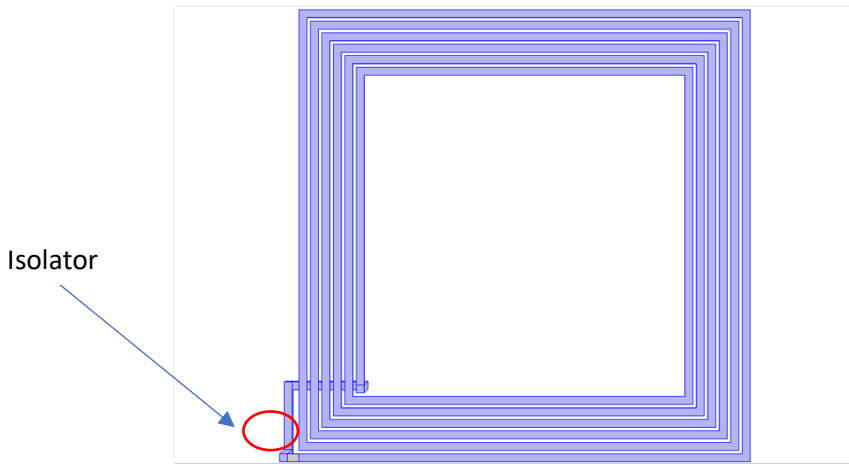

Fig. 9. Copper made material. All the PSC parts are made from copper except the isolator between two input/output ports

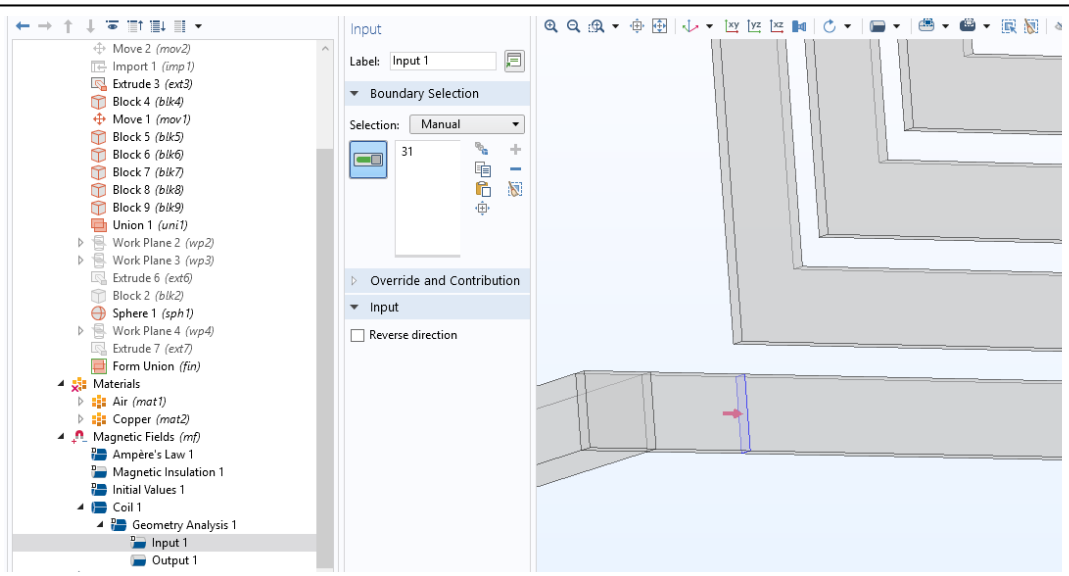

Fig. 10. The *mf* Physic and input/output ports definition.

e) Results: After running the study, in “Derived Values” the “Coil Parameters” from in “Magnetic Fields” tab must be selected, as shown in Fig. 11. The output is a table like the one is shown in Fig. 12.

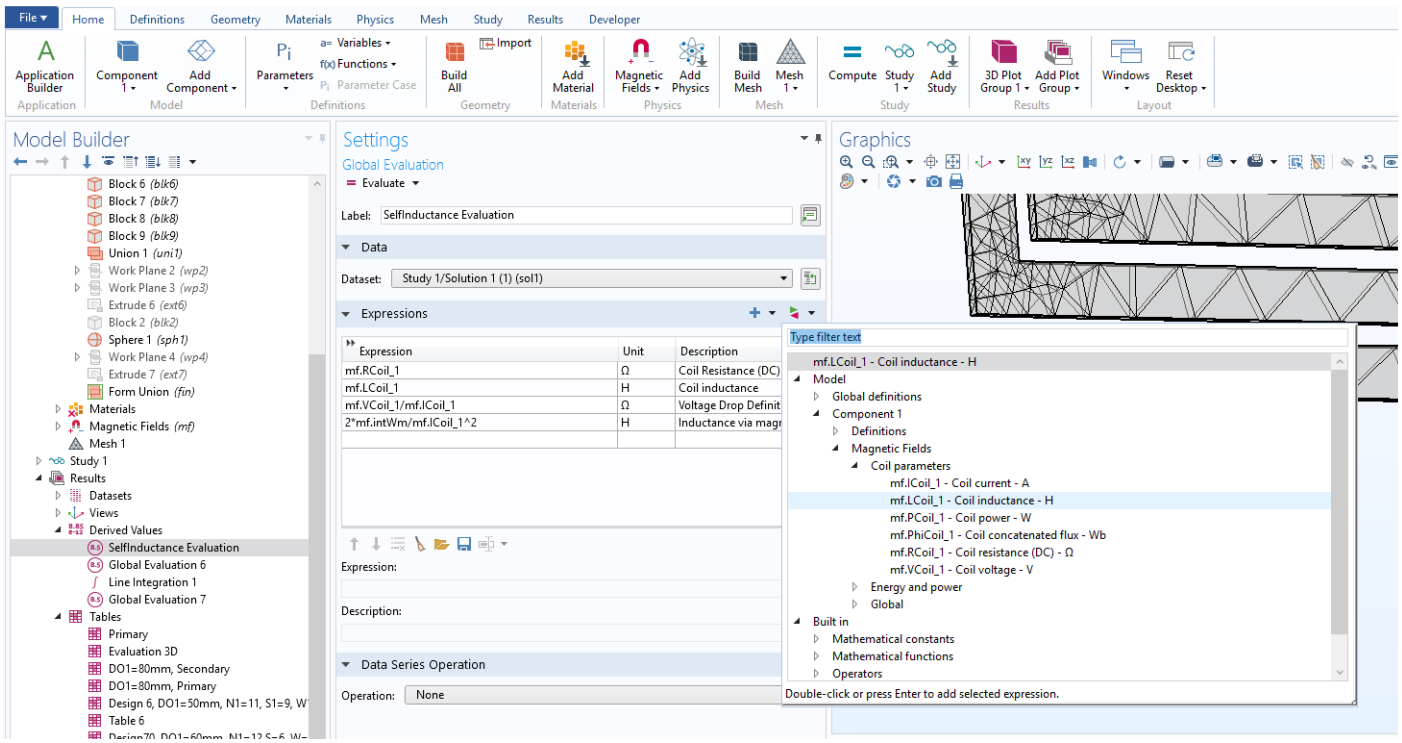

Fig. 11. The coil parameters in derived values after running the study to find the coil parameters, including self-inductance

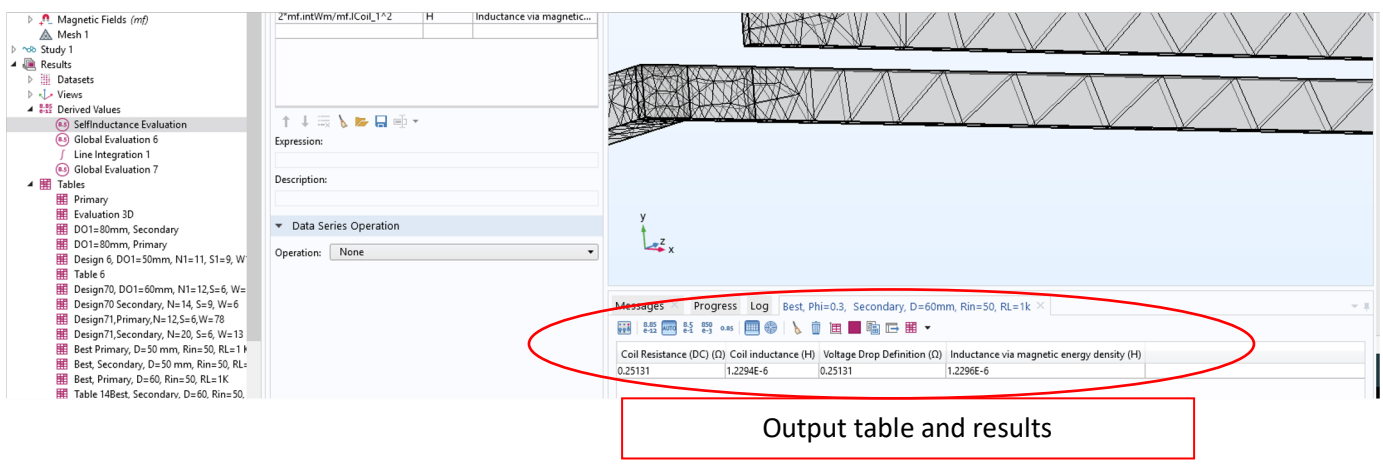

Fig. 12. A typical output table showing the coil parameters.

2- Simulation to find the coupling factor between two coils

The COMSOL file for the coupling factor simulation is specific for any pair. For example, the final design that is the subject of our third paper, is simulated in a file entitled ***Best_D1_60mm_R1_1K.mph.*** The simulation has the following important sections:

a) **Parameters:** All the parameters and constants need to be defined in this section. Fig. 13 is a snapshot of parameters defined for ***Best_D1_60mm_R1_1K.mph.*** In these parameters, D is the distance between the coils and Displace is the lateral displacement

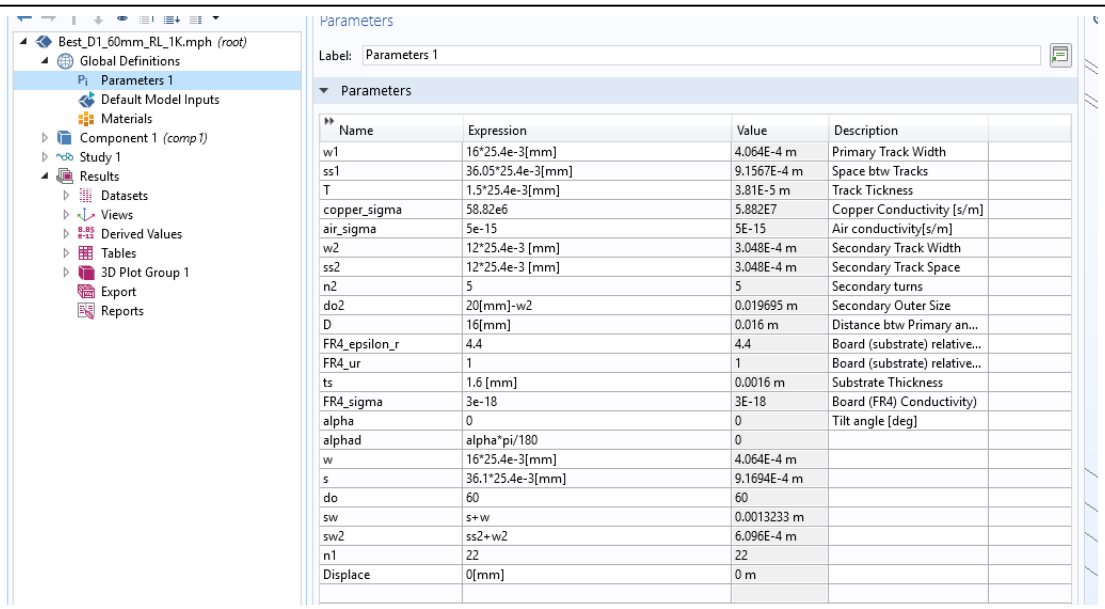

Name	Expression	Value	Description
w1	16*25.4e-3[mm]	4.064E-4 m	Primary Track Width
ss1	36.05*25.4e-3[mm]	9.1567E-4 m	Space btw Tracks
T	1.5*25.4e-3[mm]	3.81E-5 m	Track Tickness
copper_sigma	58.82e6	5.882E7	Copper Conductivity [s/m]
air_sigma	5e-15	5E-15	Air conductivity[s/m]
w2	12*25.4e-3 [mm]	3.048E-4 m	Secondary Track Width
ss2	12*25.4e-3 [mm]	3.048E-4 m	Secondary Track Space
n2	5	5	Secondary turns
do2	20[mm]-w2	0.019695 m	Secondary Outer Size
D	16[mm]	0.016 m	Distance btw Primary an...
FR4_epsilon_r	4.4	4.4	Board (substrate) relative...
FR4_ur	1	1	Board (substrate) relative...
ts	1.6 [mm]	0.0016 m	Substrate Thickness
FR4_sigma	3e-18	3E-18	Board (FR4) Conductivity)
alpha	0	0	Tilt angle [deg]
alphad	alpha*pi/180	0	
w	16*25.4e-3[mm]	4.064E-4 m	
s	36.1*25.4e-3[mm]	9.1694E-4 m	
do	60	60	
sw	s+w	0.0013233 m	
sw2	ss2+w2	6.096E-4 m	
n1	22	22	
Displace	0[mm]	0 m	

Fig. 13. Snapshot of parameters defined for ***Best_D1_60mm_RL_1K.mph.***

Point	X	Y
A	$\frac{-D_O}{2} + (n-1)sw$	$\frac{-D_O}{2} + (n-2).sw$
B	$\frac{-D_O}{2} + (n-1)sw$	$\frac{D_O}{2} - (n-1)sw$
C	$\frac{D_O}{2} - (n-1)sw$	$\frac{D_O}{2} - (n-1)sw$
D	$\frac{D_O}{2} - (n-1)sw$	$\frac{-D_O}{2} + (n-1)sw$

Fig. 14. Bezier Polygon for drawing the secondary for line integral in calculation of mutual inductance.

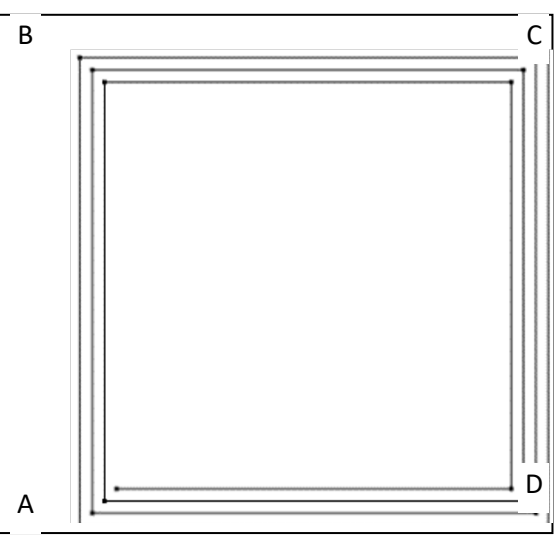

b) **Geometry:** The primary coil is defined as a polygon and all the drawing points are the same as Fig. 7. The secondary is defied as the spiral lines that is the defined with **Bezier Polygon.** The Bezier polygon needs to be

defined as shown in Fig. 14. The final output of Geometry is a figure like the one is shown in Fig. 15. The boundary is defined with a sphere with radius=200 mm, large enough to not affect the flux around the coils.

c) **Materials:** The materials are air and copper. The primary is made from copper and the rest are made from copper.

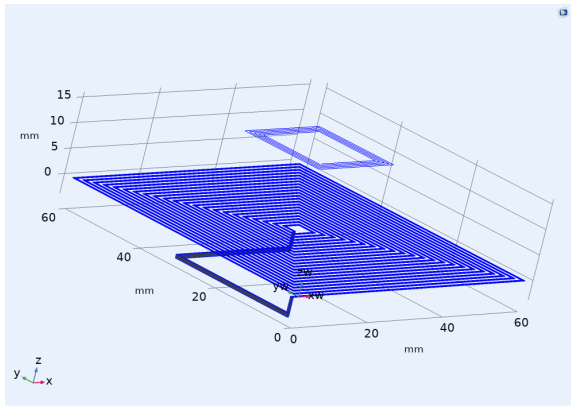

Fig. 15. The output from Geometry

d) **Physics:** The Physics is like what is shown in Fig. 10 and there is no difference. A critical parameter that increase the result precision is the (primary) coil current. In our simulation it is always defined at 10 A. if is assigned as a small number the flux density visualization would be unclear and unorganized (if we would like to 3D plot like Arrow volume).

e) **Results:** after running the study, in Derived Values, we must take the line integral of magnetic vector potential over the secondary lines, as it is shown in Fig. 16, with the following expression:

tA2x*t1x+tA2y*t1y+tA2z*t1z

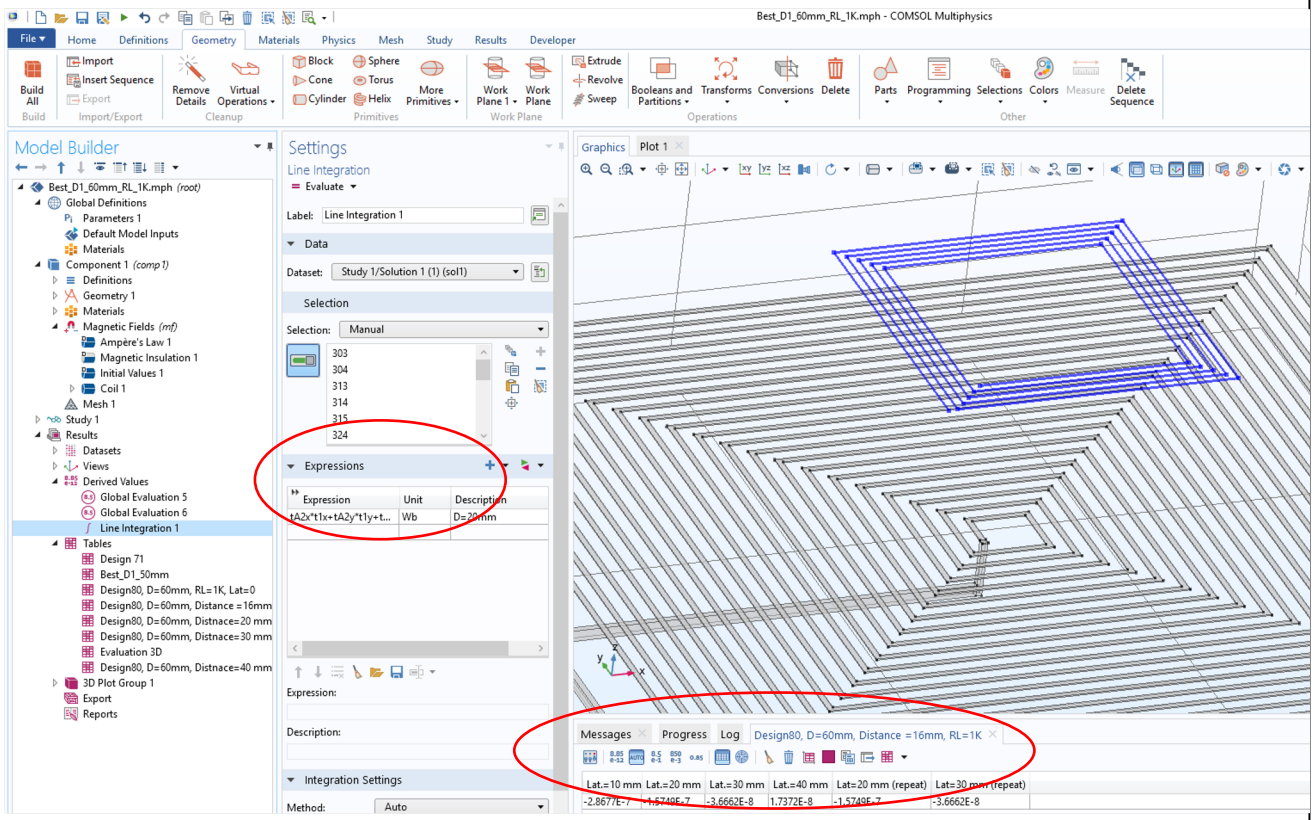

Fig. 16. The line integral of the magnetic vector potential over the secondary lines for different D and Displacement gives the inductive voltage in the secondary and after dividing by primary coil current (much better to define it a large number like 10 A) the mutual inductance can be calculated. The integral route must be closed but the results do not have significant difference if the route is not closed as it is shown here. The results are shown for D=16 mm and different displacement 10, 20, 30, 40 mm in this figure.

E. PCB design

The coil's coordinates in PCB design are defined in Fig. 17 based on the coil specs.

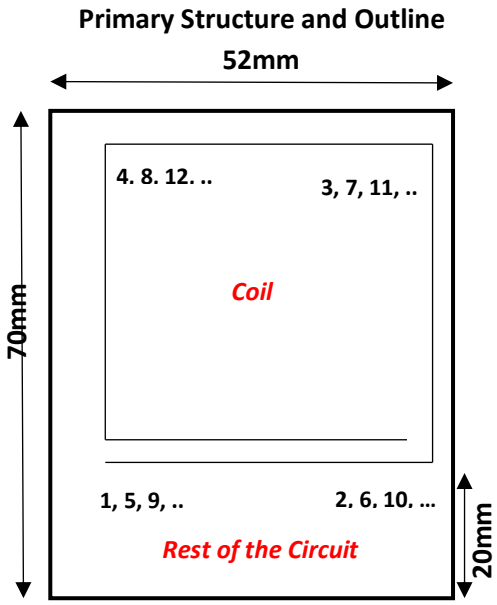

X_0, Y_0: $origin$

N	P	X	Y
1	1	X_0	Y_0
	2	$X_0 + d_o - w$	Y_0
	3	$X_0 + d_o - w$	$Y_0 + d_o - w$
	4	X_0	$Y_0 + d_o - w$
2	5	X_0	$Y_0 + s + w$
	6	$X_0 + d_o - w - (s + w)$	$Y_0 + s + w$
	7	$X_0 + d_o - w - (s + w)$	$Y_0 + d_o - w - (s + w)$
	8	$X_0 + (s + w)$	$Y_0 + d_o - w - (s + w)$
3	9	$X_0 + (s + w)$	$Y_0 + 2(s + w)$
	10	$X_0 + d_o - w - 2(s + w)$	$Y_0 + 2(s + w)$
	11	$X_0 + d_o - w - 2(s + w)$	$Y_0 + d_o - w - 2(s + w)$
	12	$X_0 + 2(s + w)$	$Y_0 + d_o - w - 2(s + w)$
n	4(n-1)+1	$X_0 + (n - 2)(s + w)$	$Y_0 + (n - 1)(s + w)$
	4(n-1)+2	$X_0 + d_o - w - (n - 1)(s + w)$	$Y_0 + (n - 1)(s + w)$
	4(n-1)+3	$X_0 + d_o - w - (n - 1)(s + w)$	$Y_0 + d_o - w - (n - 1)(s + w)$
	4(n-1)+4	$X_0 + (n - 1)(s + w)$	$Y_0 + d_o - w - (n - 1)(s + w)$

Board layout and the coils corners coordinates (X0 and Y0 is an arbitrary point coordinate of the left down corner of coil).

N: number of turns , **w**: trace width, **s**: space between traces, **do**: coil outer diameter

Fig. 17. Coil's PCB design cordinates.